Work Order ID 74146

Monday, September 26, 2011 8:58:30 AM

Item ID: D4034-043 **Accept** **Setup Start** **Stop**

Revision ID:

Item Name: Fwd Upper Rib Assembly

Start Date: 9/27/2011 **Start Qty:** 3.00 **Cust Item ID:**

Required Date: 10/7/2011 **Req'd Qty:** 3.00 **Customer:**

Reference:

Approvals: **Process Plan:** MF **Date:** 11-09-26 **Tooling:** _____ **Date:** _____ **Run Start** **Stop**

QC: _____ **Date:** _____ **SPC (Y/N):** _____ **Date:** _____

Sequence ID/ Work Center ID	Operation Description	Set Up/ Run Hours	Tool ID	Tool #	Plan Code	Accept Qty	Reject Qty	Reject Number	Insp. Stamp
Draw Nbr	**Revision Nbr**								
D4034	B								
100	Weld per dwg A/R S.S. rod Batch: M115778	0.00							
Large Fab	**Memo**	0.00							
Large Fab	1- Assemble ribs to hoop and weld as per dwg DT9564 2- Weld bushing in rib as per dwg								
110	QC9- Inspect visual per QSI004- Fusion Welds	0.00							
QC	**Memo**	0.00							
Quality Control									
120	QC5- Inspect part completeness to step on W/O	0.00							
QC	**Memo**	0.00							
Quality Control									

SY 11/10/06 (3x)

PC 11.10.06

Su 10/06 (+3)

Dart Aerospace Ltd

W/O:		WORK ORDER CHANGES					
DATE	STEP	PROCEDURE CHANGE	By	Date	Qty	Approval Chief Eng / Prod Mgr	Approval QC Inspector

Part No: _____ **PAR #:** _____ **Fault Category:** _____ **NCR:** Yes No **DQA:** _____ **Date:** _____

Resolution: _____ **Disposition:** _____ **QA: N/C Closed:** _____ **Date:** _____

NCR:		WORK ORDER NON-CONFORMANCE (NCR)						
DATE	STEP	Description of NC Section A	Corrective Action Section B			Verification Section C	Approval Chief Eng	Approval QC Inspector
			Initial Chief Eng	Action Description Chief Eng	Sign & Date			

NOTE: Date & initial all entries

H:\fFORMS\Quality Assurance\approved QA\NCRWO RevE

Work Order ID 74146

Monday, September 26, 2011 8:58:30 AM

Item ID: D4034-043 **Accept** **Setup Start**

Revision ID: **Stop**

Item Name: Fwd Upper Rib Assembly

Start Date: 9/27/2011 **Start Qty:** 3.00 **Cust Item ID:**

Required Date: 10/7/2011 **Req'd Qty:** 3.00 **Customer:**

Reference:

Approvals: **Process Plan:** _____ **Date:** _____ **Tooling:** _____ **Date:** _____ **Run Start**

QC: _____ **Date:** _____ **SPC (Y/N):** _____ **Date:** _____ **Stop**

Sequence ID/ Work Center ID	Operation Description	Set Up/ Run Hours	Tool ID	Tool #	Plan Code	Accept Qty	Reject Qty	Reject Number	Insp. Stamp
130	Identify as per dwg & Stock Location:_____	0.00							
Packaging	Badgt 411								
	Memo	0.00							
Packaging									
140	QC21- Final Inspection - Work Order Release	0.00							
QC									
	Memo	0.00							
Quality Control									

11/10/06 Bx

11/10/11

MF 11-10-06

Dart Aerospace Ltd

W/O:		WORK ORDER CHANGES					
DATE	STEP	PROCEDURE CHANGE	By	Date	Qty	Approval Chief Eng / Prod Mgr	Approval QC Inspector

Part No: _____ **PAR #:** _____ **Fault Category:** _____ **NCR:** Yes No **DQA:** _____ **Date:** _____

Resolution: _____ **Disposition:** _____ **QA: N/C Closed:** _____ **Date:** _____

NCR:		WORK ORDER NON-CONFORMANCE (NCR)						
DATE	STEP	Description of NC Section A	Corrective Action Section B			Verification Section C	Approval Chief Eng	Approval QC Inspector
			Initial Chief Eng	Action Description Chief Eng	Sign & Date			

NOTE: Date & initial all entries

H:\fFORMS\Quality Assurance\approved QA\NCRWO RevE

Picklist Print

Monday, September 26, 2011 8:58:27 AM

Work Order ID: 74146

Parent Item: D4034-043

Parent Item Name: Fwd Upper Rib Assembly

Start Date: 9/27/2011 **Required Date:** 10/7/2011

Start Qty: 3.00 **Required Qty:** 3.00

Comments: IPP RevA: new issue DD 09.11.23 verified by:EC IPP Rev:B as per dwg revA 10.03.15 verified by:EC IPP Rev:C 11.01.19 AS PER DWG REV.B DD VERF:EC

Component Item ID/ Item Name	Replacement Item ID	Mfg/ Purch	Bin Item	Primary Location	Last Location	Route Seq ID	Unit of Measure	Qty on Hand	Qty per Kit	Total Qty	Qty Issued	Date Issued	Status
D4034-1 Rib		Manufactured	No			100	Each	4.0000	1	3			
				Location		**Loc Qty**		**Loc Code**					
				WA006		4							
					69014	4				3x			
D4034-5 Rib		Manufactured	No			100	Each	5.0000	1	3			
				Location		**Loc Qty**		**Loc Code**					
				WA		2							
					67339	1							
					72498	1				2x			
				WA006		3							
					70343	3				1x			
D2327-3 Spacer Bushing		Manufactured	No			100	Each	24.0000	1	3			
				Location		**Loc Qty**		**Loc Code**					
				WA		24							
					71971	1							
					72296	3							
					72963	20				3x			

11/10/06

11/10/06

11/10/06

Dart Aerospace Ltd

W/O:		WORK ORDER CHANGES					
DATE	STEP	PROCEDURE CHANGE	By	Date	Qty	Approval Chief Eng / Prod Mgr	Approval QC Inspector

Part No: _____ **PAR #:** _____ **Fault Category:** _____ **NCR:** Yes No **DQA:** _____ **Date:** _____

Resolution: _____ **Disposition:** _____ **QA: N/C Closed:** _____ **Date:** _____

NCR:		WORK ORDER NON-CONFORMANCE (NCR)						
DATE	STEP	Description of NC Section A	Corrective Action Section B			Verification Section C	Approval Chief Eng	Approval QC Inspector
			Initial Chief Eng	Action Description Chief Eng	Sign & Date			

NOTE: Date & initial all entries

H:\fFORMS\Quality Assurance\approved QA\NCRWO RevE

Picklist Print

Monday, September 26, 2011 8:58:27 AM

Work Order ID: 74146

Parent Item: D4034-043

Parent Item Name: Fwd Upper Rib Assembly

Start Date: 9/27/2011 **Required Date:** 10/7/2011

Start Qty: 3.00 **Required Qty:** 3.00

D4021-7	Manufactured	No	100	Each	11.0000	1	3	
Hoop								

Location	Loc Qty	Loc Code
WA005	11	
72252	11	

11/10/06

3x

Dart Aerospace Ltd

W/O:		WORK ORDER CHANGES					
DATE	STEP	PROCEDURE CHANGE	By	Date	Qty	Approval Chief Eng / Prod Mgr	Approval QC Inspector

Part No: _____ **PAR #:** _____ **Fault Category:** _____ **NCR:** Yes No **DQA:** _____ **Date:** _____

Resolution: _____ **Disposition:** _____ **QA: N/C Closed:** _____ **Date:** _____

NCR:		WORK ORDER NON-CONFORMANCE (NCR)						
DATE	STEP	Description of NC Section A	Corrective Action Section B			Verification Section C	Approval Chief Eng	Approval QC Inspector
			Initial Chief Eng	Action Description Chief Eng	Sign & Date			

NOTE: Date & initial all entries

H:\fFORMS\Quality Assurance\approved QA\NCRWO RevE

ITEM	QTY -041	QTY -043	P/N	DESCRIPTION
	X		D4034-041	AFT UPPER RIB ASSY
		X	D4034-043	FWD UPPER RIB ASSY
1	1	1	D4034-1	RIB
2	1		D4034-3	RIB
3		1	D4034-5	RIB
4		1	D2327-3	SPACER BUSHING
5	1	1	D4021-7	HOOP
6	4		D4021-9	BUSHING

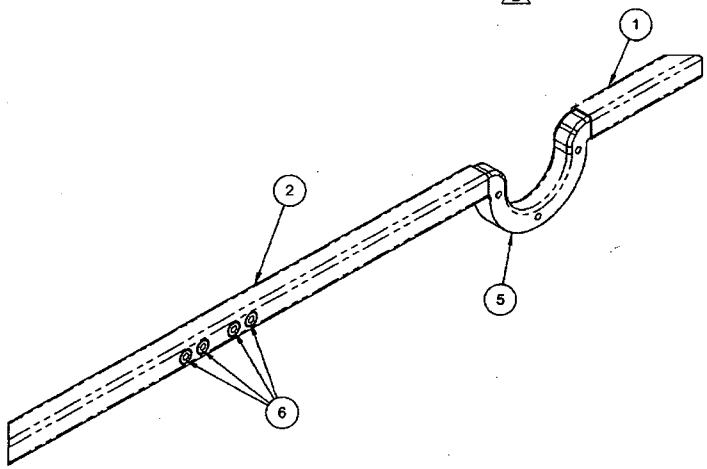

D4034-041 AFT UPPER RIB ASSY

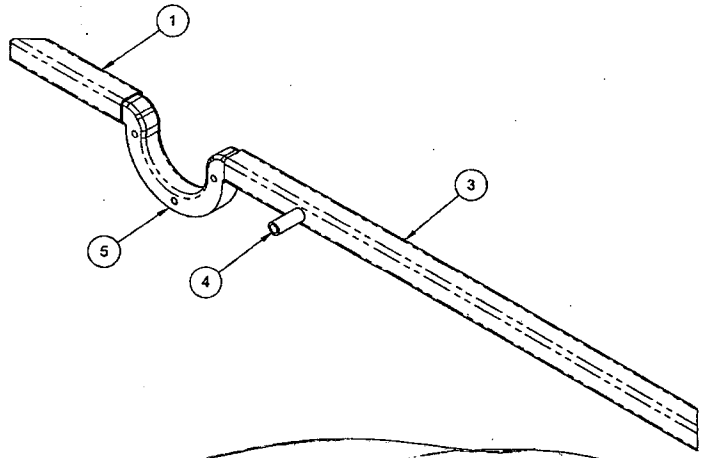

D4034-043 FWD UPPER RIB ASSY

RELEASED
2011 -01- 18

#74146

REV.	DESCRIPTION	BY	DATE
B	ADDITIONAL HOLES ADDED ON D4034-3 RIB	SC	10.12.20
A	NEW ISSUE	AJS	10.03.04

DESIGN	AJS	DART AEROSPACE LTD HAWKESBURY, ONTARIO, CANADA
DRAWN	SC	
CHECKED		DRAWING NO. D4034 — REV. B — SHEET 1 OF 4
MFG. APPR.		
APPROVED		TITLE: UPPER RIB ASSY, BASKET BASE — SCALE: NTS
DE APPR.		
DATE	10.12.20	

Dart Aerospace Ltd

W/O:		WORK ORDER CHANGES					
DATE	STEP	PROCEDURE CHANGE	By	Date	Qty	Approval Chief Eng / Prod Mgr	Approval QC Inspector

Part No: _____ **PAR #:** _____ **Fault Category:** _____ **NCR:** Yes No **DQA:** _____ **Date:** _____

Resolution: _____ **Disposition:** _____ **QA: N/C Closed:** _____ **Date:** _____

NCR:		WORK ORDER NON-CONFORMANCE (NCR)						
DATE	STEP	Description of NC Section A	Corrective Action Section B			Verification Section C	Approval Chief Eng	Approval QC Inspector
			Initial Chief Eng	Action Description Chief Eng	Sign & Date			

NOTE: Date & initial all entries

H:\fFORMS\Quality Assurance\approved QA\NCRWO RevE

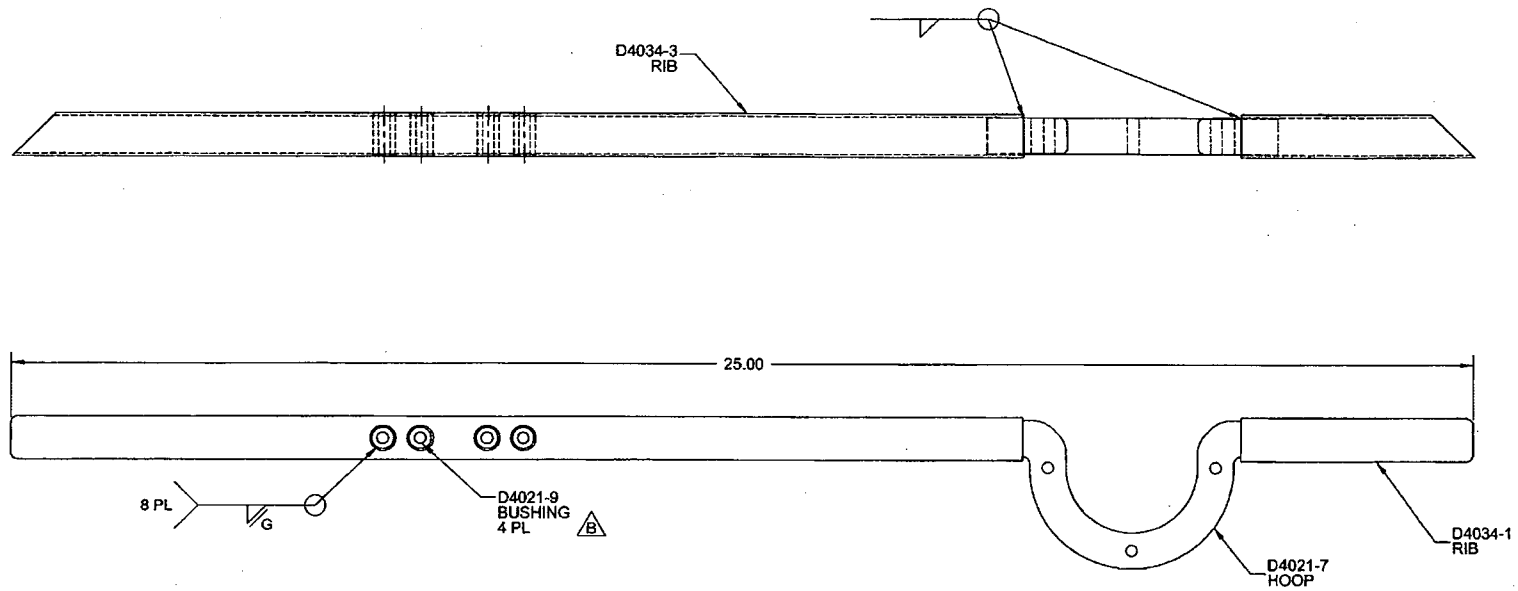

D4034-041 AFT UPPER RIB ASSY B

RELEASED
2011 -01- 18

74146

NOTES:
1) MATERIAL: N/A
2) FINISH: NONE
3) TOLERANCES: PER DART QSI 018 UNLESS OTHERWISE NOTED
4) UNITS: INCHES UNLESS OTHERWISE NOTED
5) BREAK SHARP EDGES: 0.005 TO 0.010 MAX
6) IDENTIFICATION: N/A
7) WEIGHT: 1.61 lbs
8) WELD PER DART QSI 004

DESIGN	AJS	**DART AEROSPACE LTD** HAWKESBURY, ONTARIO, CANADA
DRAWN	SC	
CHECKED		DRAWING NO. D4034 — REV. B — SHEET 2 OF 4
MFG. APPR.		
APPROVED		TITLE: UPPER RIB ASSY, BASKET BASE — SCALE: NTS
DE APPR.		
DATE	10.12.20	

Dart Aerospace Ltd

W/O:		WORK ORDER CHANGES					
DATE	STEP	PROCEDURE CHANGE	By	Date	Qty	Approval Chief Eng / Prod Mgr	Approval QC Inspector

Part No: _____ **PAR #:** _____ **Fault Category:** _____ **NCR:** Yes No **DQA:** _____ **Date:** _____

Resolution: _____ **Disposition:** _____ **QA: N/C Closed:** _____ **Date:** _____

NCR:		WORK ORDER NON-CONFORMANCE (NCR)						
DATE	STEP	Description of NC Section A	Corrective Action Section B			Verification Section C	Approval Chief Eng	Approval QC Inspector
			Initial Chief Eng	Action Description Chief Eng	Sign & Date			

NOTE: Date & initial all entries

H:\FORMS\Quality Assurance\approved QA\NCRWO RevE

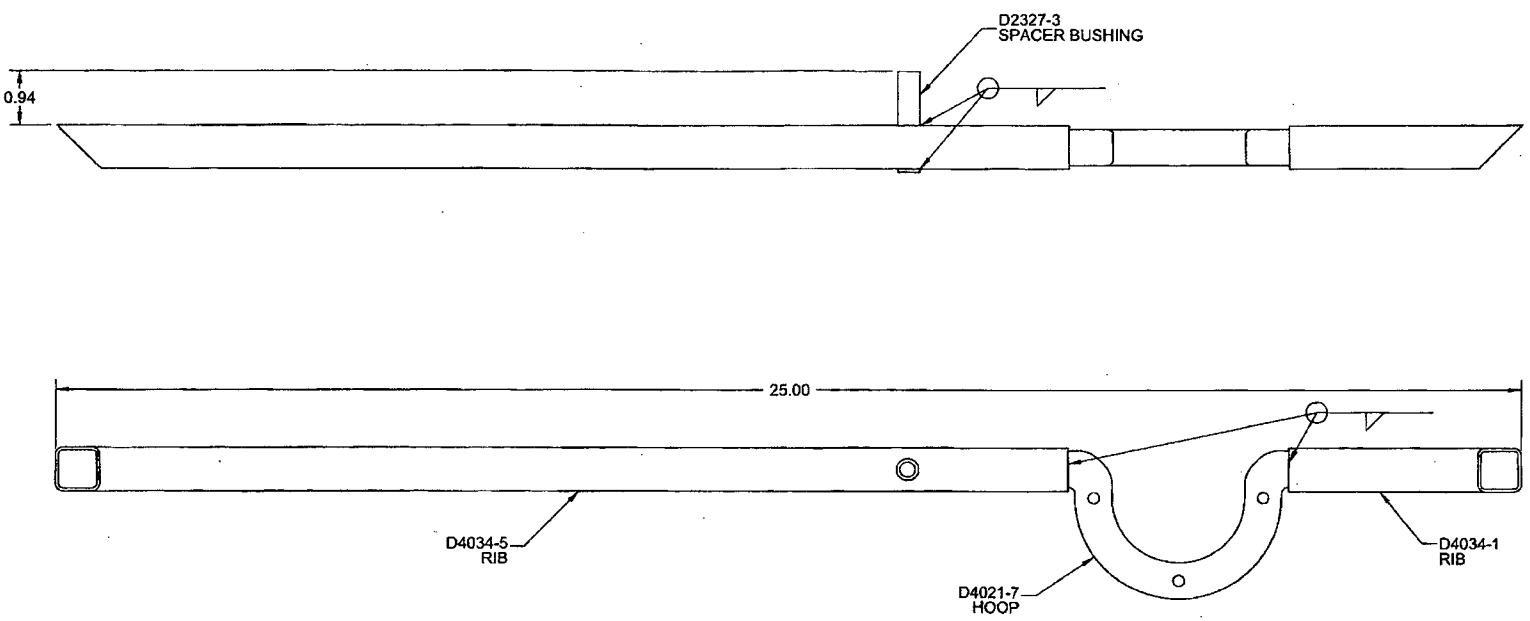

D4034-043 FWD UPPER RIB ASSY

RELEASED
2011 -01- 18

#74146

NOTES:
1) MATERIAL: N/A
2) FINISH: NONE
3) TOLERANCES: PER DART QSI 018 UNLESS OTHERWISE NOTED
4) UNITS: INCHES UNLESS OTHERWISE NOTED
5) BREAK SHARP EDGES: 0.005 TO 0.010 MAX
6) IDENTIFICATION: N/A
7) WEIGHT: 1.58 lbs
8) WELD PER DART QSI 004

DESIGN	AJS	**DART AEROSPACE LTD** HAWKESBURY, ONTARIO, CANADA
DRAWN	SC	
CHECKED		DRAWING NO. D4034 — REV. B — SHEET 3 OF 4
MFG. APPR.		
APPROVED		TITLE: UPPER RIB ASSY, BASKET BASE — SCALE: NTS
DE APPR.		
DATE	10.12.20	

Dart Aerospace Ltd

W/O:		WORK ORDER CHANGES					
DATE	STEP	PROCEDURE CHANGE	By	Date	Qty	Approval Chief Eng / Prod Mgr	Approval QC Inspector

Part No: _____ **PAR #:** _____ **Fault Category:** _____ **NCR:** Yes No **DQA:** _____ **Date:** _____

Resolution: _____ **Disposition:** _____ **QA: N/C Closed:** _____ **Date:** _____

NCR:		WORK ORDER NON-CONFORMANCE (NCR)						
DATE	STEP	Description of NC Section A	Corrective Action Section B			Verification Section C	Approval Chief Eng	Approval QC Inspector
			Initial Chief Eng	Action Description Chief Eng	Sign & Date			

NOTE: Date & initial all entries

H:\fFORMS\Quality Assurance\approved QA\NCRWO RevE

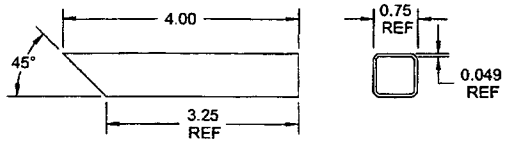

D4034-1 RIB

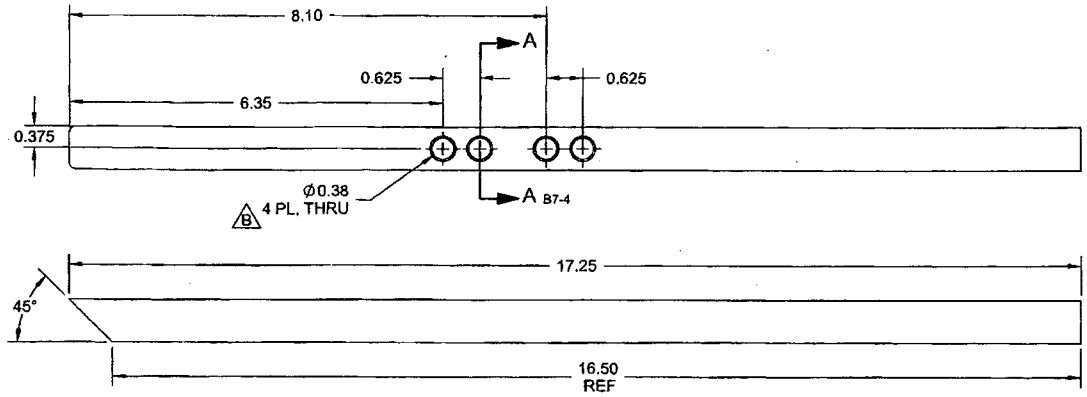

D4034-3 RIB

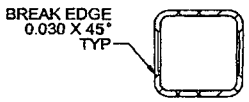

SECTION A-A D4-4

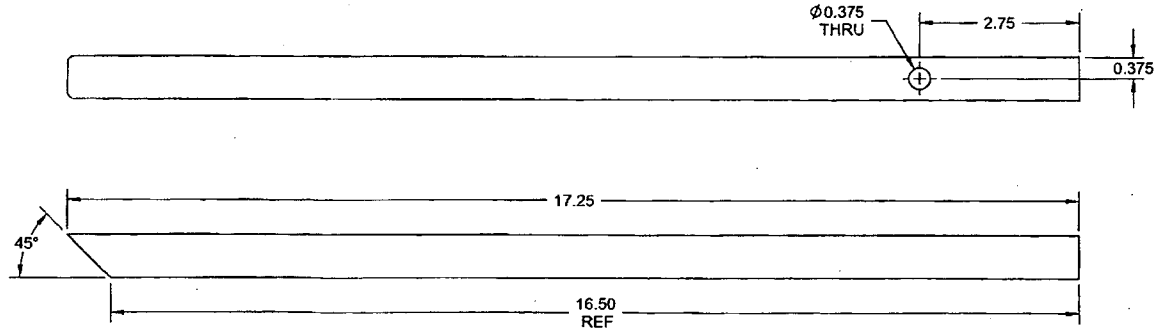

D4034-5 RIB

RELEASED
2011 -01- 18

NOTES:
1) MATERIAL: AISI 304/316 STAINLESS STEEL SQUARE TUBE, 0.75 X 0.75 X 0.049 WALL
REF DART SPEC. M304TS0.750W.049
2) FINISH: NONE
3) TOLERANCES: PER DART QSI 018 UNLESS OTHERWISE NOTED
4) UNITS: INCHES UNLESS OTHERWISE NOTED
5) BREAK SHARP EDGES: 0.005 TO 0.010 MAX
6) IDENTIFICATION: N/A
7) WEIGHT -1: 0.13 lbs
-3 & -5: 0.62 lbs

#74146

DESIGN	AJS	**DART AEROSPACE LTD** HAWKESBURY, ONTARIO, CANADA
DRAWN	SC	
CHECKED		DRAWING NO. D4034 — REV. B — SHEET 4 OF 4
MFG. APPR.		
APPROVED		TITLE: UPPER RIB ASSY, BASKET BASE — SCALE: NTS
DE APPR.		
DATE	10.12.20	

Dart Aerospace Ltd

W/O:		WORK ORDER CHANGES					
DATE	STEP	PROCEDURE CHANGE	By	Date	Qty	Approval Chief Eng / Prod Mgr	Approval QC Inspector

Part No: _____ **PAR #:** _____ **Fault Category:** _____ **NCR:** Yes No **DQA:** _____ **Date:** _____

Resolution: _____ **Disposition:** _____ **QA: N/C Closed:** _____ **Date:** _____

NCR:		WORK ORDER NON-CONFORMANCE (NCR)						
DATE	STEP	Description of NC Section A	Corrective Action Section B			Verification Section C	Approval Chief Eng	Approval QC Inspector
			Initial Chief Eng	Action Description Chief Eng	Sign & Date			

NOTE: Date & initial all entries

H:\fFORMS\Quality Assurance\approved QA\NCRWO RevE